Parts List				
ITEM	QTY	PART No.	DESCRIPTION	MATERIAL
1	1	BB8907	Ø80 SP Rec 10k Interv MP 3/8" for test	UNS S32750 / S32760

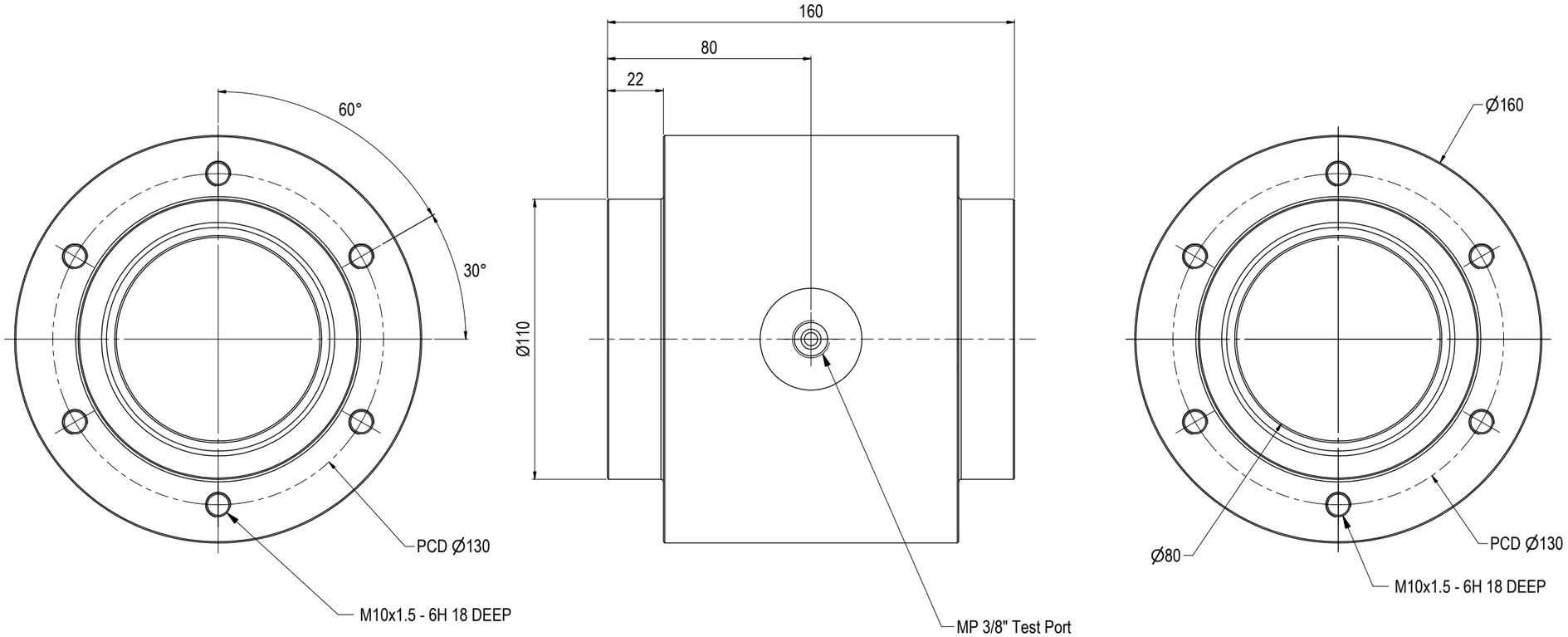

NOTE: 1
DESIGN CODE:
API 17H Type 4

NOTE: 2
TECHNICAL CLASSIFICATION:

Article Type:	001-Hot Stabs
Main Group:	1.05. Ø80 Hot Stab
Intermediate Group:	1.41.02. Receptacle
Sub Group:	1.41.100.01. Single

NOTE: 3
INTERFACE INFORMATION:

Pressure Rating Bar:	690
Design Water Depth:	3000m
Material:	UNS S32750 / S32760
Weight in Air:	14,4 kg
Volume:	1,83 dm^3
Submerged Weight:	12,52 kg
Surface Area:	1513 cm^2
Hydraulic:	MP 3/8"
Mechanical:	N/A
Electrical:	N/A
Com. & Protocol:	N/A

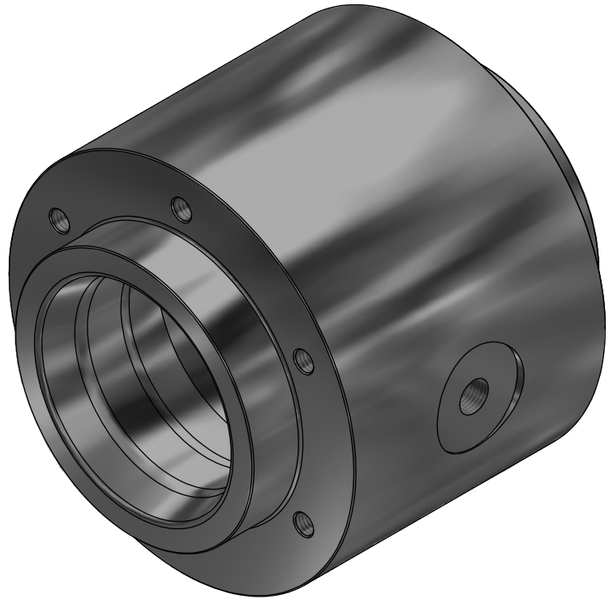

Rev.	Date	Reason for issue	Revision change	Made	Chk'd	Appr.
01	11.10.2022	9-IFU (Issued for Use)		HNJ	TAN	HNJ

BLUE LOGIC

This Drawing is the Property of Blue Logic AS © and must Not be Loaned, Reproduced or Transferred to others without written Permission

Unless Noted Otherwise:	Dwg Scale: NTS	Drawing title: Ø80 SP Rec 10k Interv MP 3/8" for test	
Dim. Tol: NS-ISO 2768-1	Dwg Proj:		
Roughness: Ra	Dwg Format: A3		
Fillet Rad: Corner Rmax:	Break Edges: (R. Alt. 45°) R= 0,1-0,5	Drawing number: BB8907	Rev. 01